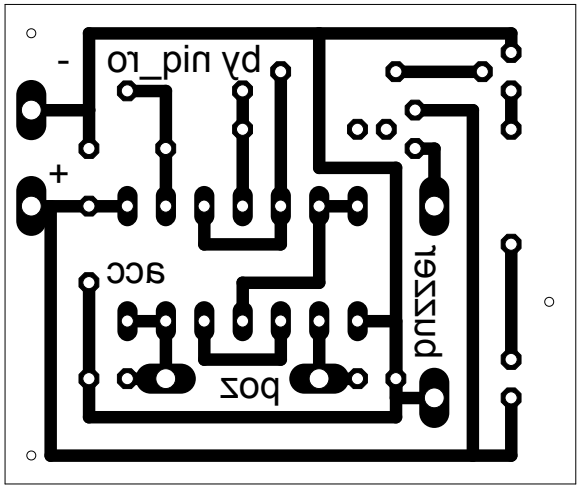
pozzud
poz
acc
+
by mid_ro
-